60YC-00630-F // AC Servo Motor

Key Specifications

Winding Wire Resistance	6.9 Ω
Phase Q-axis Inductance	5.6 mH
Phase D-axis Inductance	5.2 mH
Pole Pair	5
Protection Level	IP65
Ambient Temperature	-20 °C ~ 50 °C
Motor Insulation Grade	F
Insulation Resistance	≥ 20 MΩ (500 V)
Rotor Inertia	0.29 × 10^{-4} kg·m^2



Performance Parameters

Model	Rated Voltage	Rated Power	Rated Speed	Peak Speed	Rated Current	Rated Torque	Instantaneous Maximum Current	Instantaneous Maximum Torque	Line Back Electromotive Force (U)	Weight
60YC-00630-F	220 V	200 W	3000 rpm	6000 rpm	1.7 A	0.64 Nm	5.1 A	1.92 Nm	22.9 (V/1000r/m)	0.88 kg

Dimensions (mm)

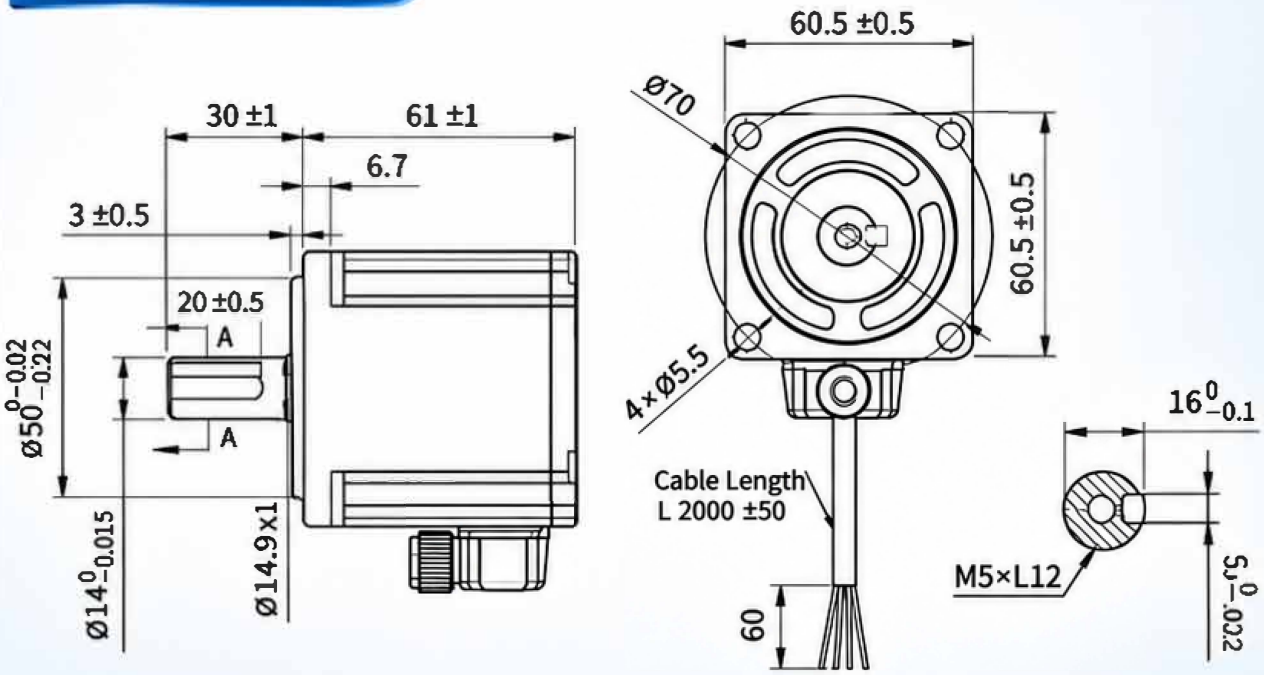

Motor Wiring Definition

Pin	1	2	3	4
Signal	U	V	W	PE
Wire Color	Red	Yellow	Blue	Black

Non inductive brushless driver wiring: red (U), blue (V), yellow (W).

Motor rotation direction: facing the shaft, clockwise or counterclockwise.

Nameplate Information



https://www.oyostepper.com

60YC-01330-F AC Servo Motor

Key Specifications

winding Wire Resistance	**12.7 Ω**
Phase Q-axis Inductance	**11.1 mH**
Phase D-axis Inductance	**10.7 mH**
Pole Pair	**5**
Protection Level	**IP65**
Ambient Temperature	**-20 °C ~ 50 °C**
Motor Insulation Grade	**F**
Insulation Resistance	**⩾ 20 MΩ (500 V)**
Rotor Inertia	**0.56 × 10⁻⁴ kg·m²**



Performance Parameters

Model	Rated Voltage	Rated Power	Rated Speed	Peak Speed	Rated Current	Rated Torque	Instantaneous Maximum Current	Instantaneous Maximum Torque	Line Back Electromotive Force (U)	Weight
60YC-01330-F	220 V	400 W	3000 rpm	4000 rpm	1.7 A	1.27 Nm	5.1 A	3.81 Nm	55 (V/1000r/m)	1 kg

Dimensions (mm)

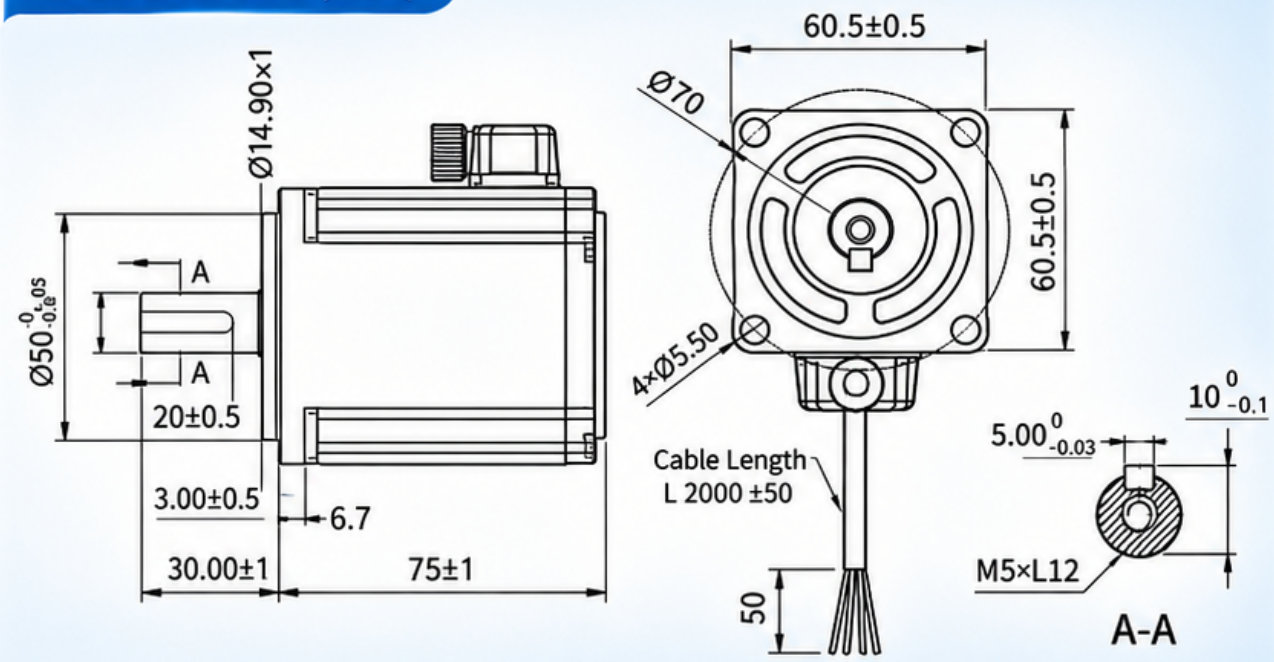

Motor Wiring Definition

Pin	1	2	3	4
Signal	U	V	W	PE
Wire Color	Red	Yellow	Blue	Yellow Green

Non inductive brushless driver wiring: red (U), blue (V), yellow (W).

Motor rotation direction: facing the shaft, clockwise or counterclockwise.

Nameplate Information

SERVO MOTOR

Mod: 60YC-01330-F
Pn: 400W Tn: 1.27N·m
Un: 220V In: 1.7A
IP: 65 Rs: 3000RPM
S/N: 202603290001
CE ISO9001-2015

https://www.oyostepper.com

60YC-02030-F AC Servo Motor

Key Specifications

Winding Wire Resistance	6.6 Ω
Phase Q-axis Inductance	6 mH
Phase D-axis Inductance	5.6 mH
Pole Pair	5
Protection Level	IP65
Ambient Temperature	-20 °C ~ 50 °C
Motor Insulation Grade	F
Insulation Resistance	≥ 20 MΩ (500 V)
Rotor Inertia	0.76×10^{-4} kg·m²



Performance Parameters

Model	Rated Voltage	Rated Power	Rated Speed	Peak Speed	Rated Current	Rated Torque	Instantaneous Maximum Current	Instantaneous Maximum Torque	Line Back Electromotive Force (U)	Weight
60YC-02030-F	220 V	600 W	3000 rpm	4000 rpm	2.2 A	1.91 Nm	6.6 A	5.73 Nm	54 (V/1000r/m)	1.44 kg

Dimensions (mm)

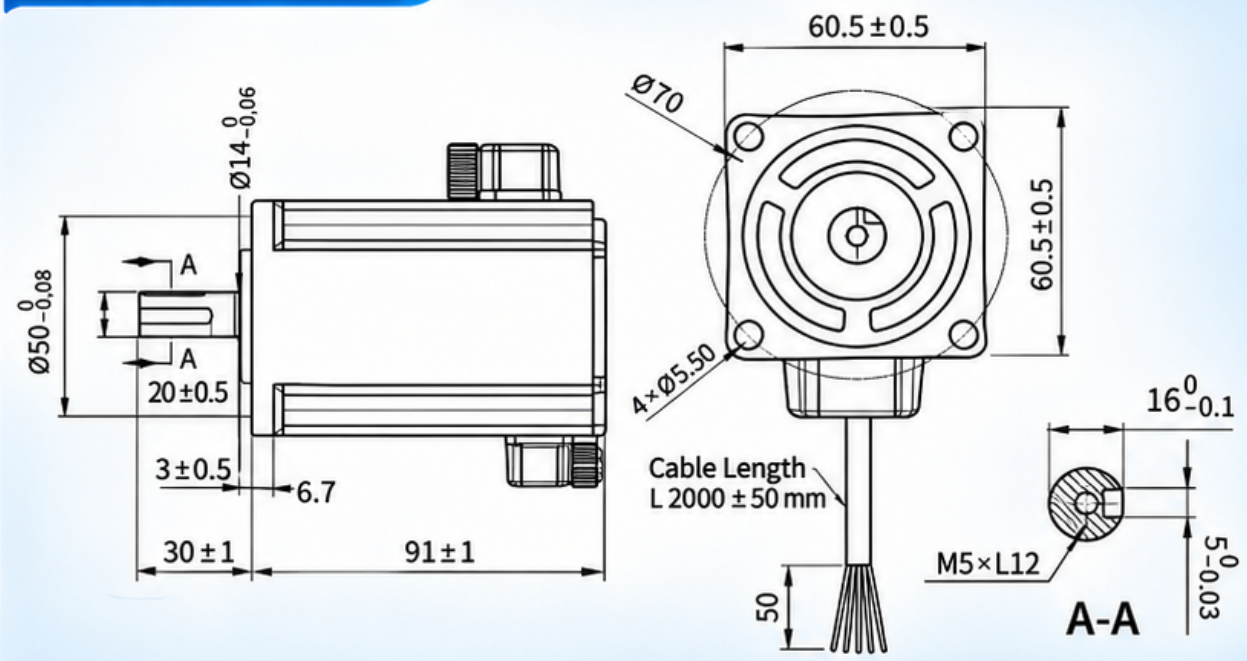

Motor Wiring Definition

Pin	1	2	3	4
Signal	U	V	W	PE
Wire Color	Red	Blue	Yellow	Black

Non inductive brushless driver wiring: red (U), blue (V), yellow (W)

Motor rotation direction: facing the shaft, clockwise or counterclockwise

Nameplate Information

SERVO MOTOR

Mod: 60YC-02030-F
Pn: 600W Tn: 1.91N·m
Un: 220V In: 2.2A
IP: 65 Rs: 100~3000rpm

https://www.oyostepper.com

80YC-02430-F AC Servo Motor

Key Specifications

Winding Wire Resistance	**5 Ω**
Phase Q-axis Inductance	**6.11 mH**
Phase D-axis Inductance	**6.1 mH**
Pole Pair	**5**
Protection Level	**IP65**
Ambient Temperature	**-20 °C ~ 50 °C**
Motor Insulation Grade	**F**
Insulation Resistance	**≥ 20 MΩ (500 V)**
Rotor Inertia	**1.56 × 10^{-4} kg·m^2**



Performance Parameters

Model	Rated Voltage	Rated Power	Rated Speed	Peak Speed	Rated Current	Rated Torque	Instantaneous Maximum Current	Instantaneous Maximum Torque	Line Back Electromotive Force (U)	Weight
80YC-02430-F	220 V	750 W	3000 rpm	4000 rpm	3 A	2.39 Nm	9 A	7.17 Nm	54 (V/1000r/m)	2 kg

Dimensions (mm)

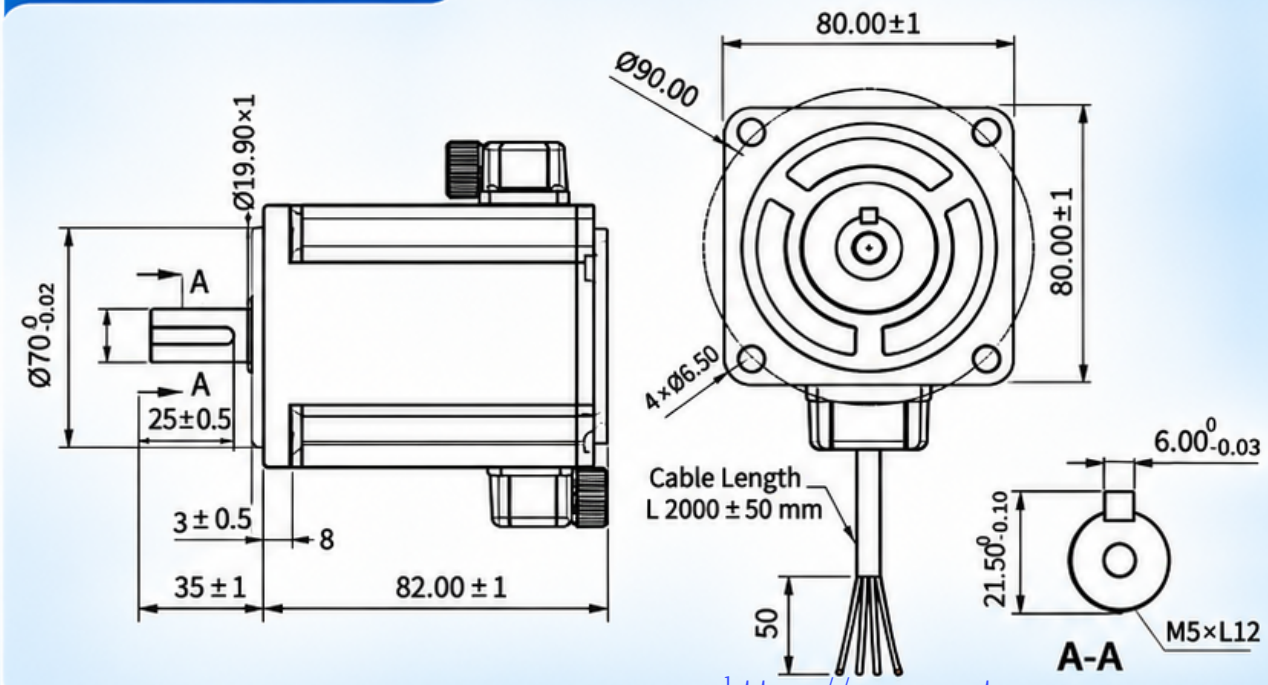

Motor Wiring Definition

Pin	1	2	3	4
Signal	U	V	W	PE
Wire Color	Red	Blue	Yellow	Black

Non inductive brushless driver wiring: red (U), blue (V), yellow (W).

Motor rotation direction: facing the shaft, clockwise or counterclockwise.

Nameplate Information

SERVO MOTOR

Mod: 80YC-02430-F
Pn: 750W Tn: 2.39N·m
Un: 220V In: 3A
IP: 65 Rs: 3000RPM
S/N: 202604010001
CE ISO9001-2015

https://www.oyostepper.com

80YC-03180-F AC Servo Motor

Key Specifications

Winding Wire Resistance	2.16 Ω
Phase Q-axis Inductance	3.9 mH
Phase D-axis Inductance	3.5 mH
Pole Pair	5
Protection Level	IP65
Ambient Temperature	-20 °C ~ 50 °C
Motor Insulation Grade	F
Insulation Resistance	≥ 20 MΩ (500 V)
Rotor Inertia	2.03×10^{-4} kg·m²



Performance Parameters

Model	Rated Voltage	Rated Power	Rated Speed	Peak Speed	Rated Current	Rated Torque	Instantaneous Maximum Current	Instantaneous Maximum Torque	Line Back Electromotive Force (U)	Weight
80YC-03180-F	220 V	1000 W	3000 rpm	4000 rpm	4 A	3.2 Nm	12 A	9.6 Nm	46.8 (V/1000r/m)	2.54 kg

Dimensions (mm)

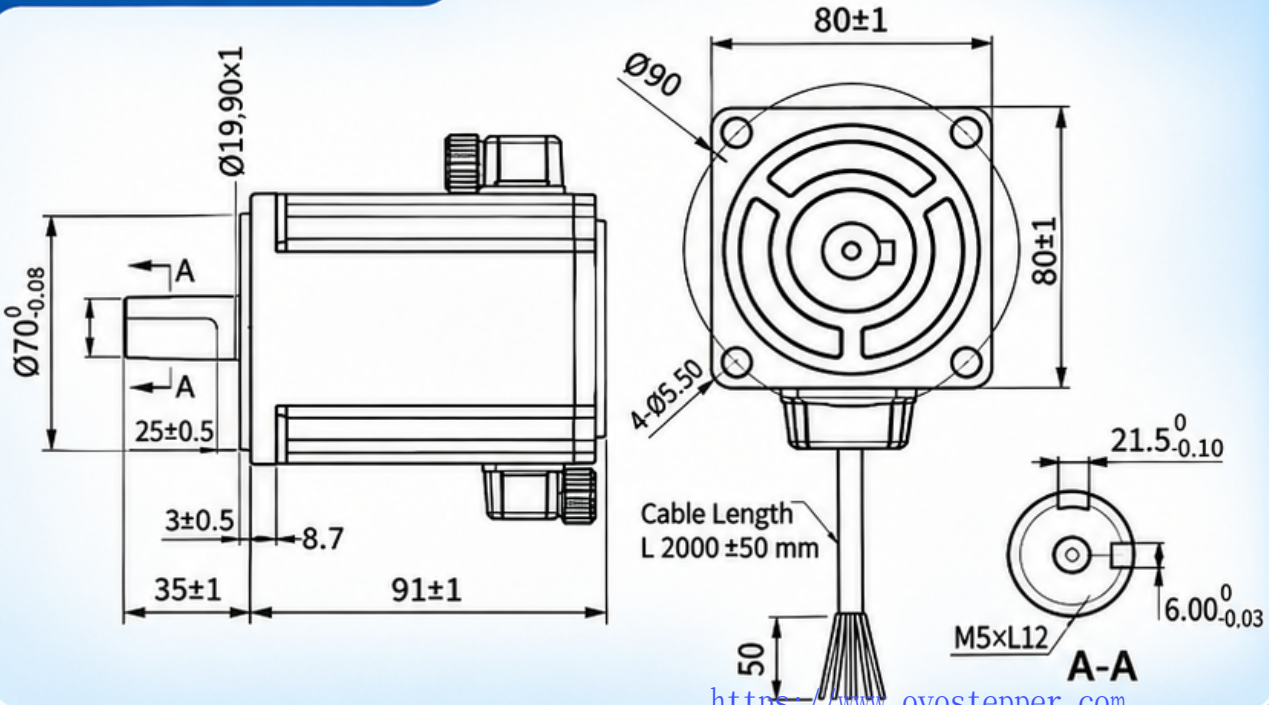

Motor Wiring Definition

Pin	1	2	3	4
Signal	U	V	W	PE
Wire Color	Red	Blue	Yellow	Black

Non inductive brushless driver wiring: red (U), blue (V), yellow (W).

Motor rotation direction: facing the shaft, clockwise or counterclockwise.

Nameplate Information

SERVO MOTOR

Mod: 80YC-03180-F
Pn: 1000W Tn: 3.2N·m
Un: 220V In: 4A
IP: 65 Rs: 3000RPM
S/N: 202605080001

https://www.ovostepper.com

Parameters of Permanent Magnet Synchronous Motor

Parameter	200W	400W	600W	750W	1000W
Rated Voltage	220V	220V	220V	220V	220V
Rated Power	200W	400W	600W	750W	1000W
Rated Current	1.7A	1.7A	2.2A	3A	4A
Rated Speed	3000rpm	3000rpm	3000rpm	3000rpm	3000rpm
Rated Torque	0.64Nm	1.27Nm	1.91Nm	2.39Nm	3.2Nm
Peak Speed	6000rpm	4000rpm	4000rpm	4000rpm	4000rpm
Instantaneous Maximum Current	5.1A	5.1A	6.6A	9A	12A
Instantaneous Maximum Torque	1.92Nm	3.81Nm	5.73Nm	7.17Nm	9.6Nm
Torque Coefficient	0.38	0.75	0.87	0.8	0.8
Line Back Electromotive Force (U)	22.9 (V/1000r/m)	55 (V/1000r/m)	54 (V/1000r/m)	54 (V/1000r/m)	46.8 (V/1000r/m)
Environmental Temperature For Use	-20℃~50℃	-20℃~50℃	-20℃~50℃	-20℃~50℃	-20℃~50℃
Winding Wire Resistance	6.9Ω	12.7Ω	6.6Ω	5Ω	2.16Ω
Phase Q-axis Inductance	5.6mH	11.1mH	6mH	6.11mH	3.9mH
Phase D-axis Inductance	5.2mH	10.7mH	5.6mH	6.1mH	3.5mH
Pole Pair	5	5	5	5	5
Number Of Encoder Lines	17Bit	–	–	–	–
Rotor Inertia	$0.29\times10^{-4}Kg.m^2$	$0.56\times10^{-4}Kg.m^2$	$0.76\times10^{-4}Kg.m^2$	$1.56\times10^{-4}Kg.m^2$	$2.03\times10^{-4}Kg.m^2$
Pressure Resistance	1500V 5s	1500V 5s	1500V 5s	1500V 5s	1500V 5s
Insulation Resistance	500V ≥20MΩ	500V ≥20MΩ	500V ≥20MΩ	500V ≥20MΩ	500V ≥20MΩ
Protection Level	IP65	IP65	IP65	IP65	IP65
Motor Insulation Grade	F	F	F	F	F
Weight	0.88kg	1kg	1.44kg	2kg	2.54kg

https://www.oyostepper.com

Driver Parameters

Project	Specifications
Input voltage	AC 220V ±15%
Input frequency	50Hz / 60Hz
Adapt motor power	750W (Supports 400W/600W/750W/1000W motor parameter switching)
Motor pole pairs	5 Pairs of poles (default)
Output method	Three phase SPWM/FOC vector control
Control method	Sensorless FOC Vector Control
Speed control range	100 ~ 9999 RPM
Speed control accuracy	± 5% (Typical value)
Acceleration	100 ~ 9999 ms (0 → 3000RPM)
Analog input	DC 0~5V (VR terminal)
Digital input	X0/X1/X2/X3, Total of 4 routes
Digital output	Y0, Total 1 channel (NPN)
Communication interface	RS485 (Modbus RTU protocol)
Protection function	Overcurrent, overvoltage, undervoltage, phase loss, locked rotor, overload, overheating
Cooling method	Fan cooling
Working environment temperature	-10 °C ~ +50 °C (No icing)
Working environment humidity	5% ~ 95% RH (No condensation)
Storage temperature	-20℃ ~ +70℃
Protection rating	IP20 (Built-in)
Installation method	Wall mounted vertical installation

https://www.oyostepper.com